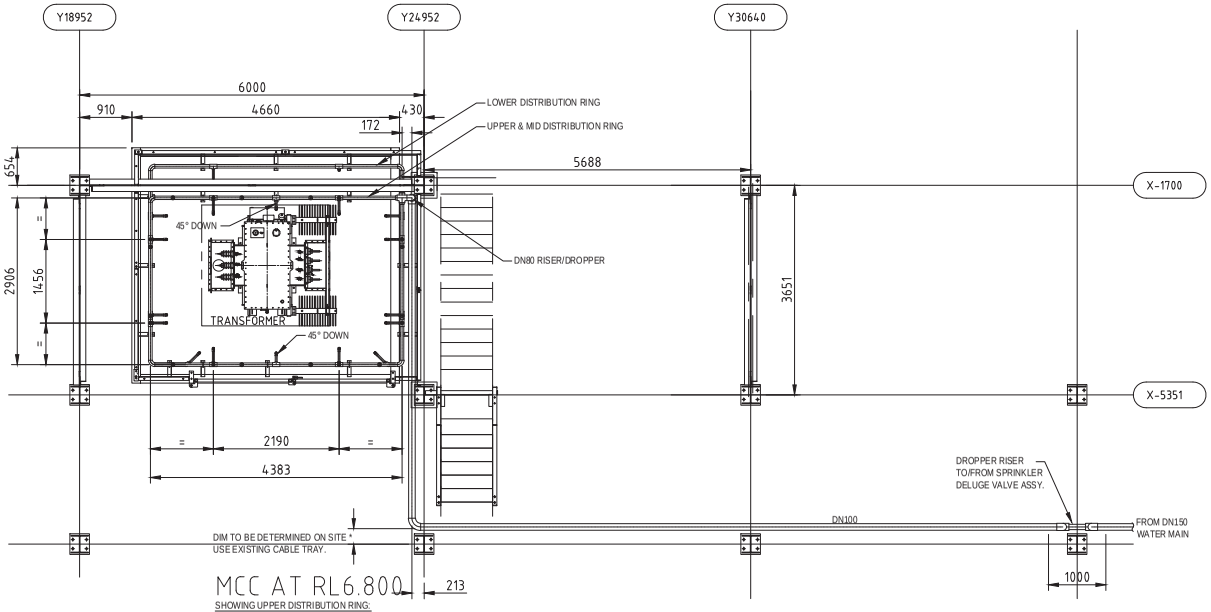

MCC AT RL6.800

SHOWING UPPER DISTRIBUTION RING:
2906 x 4383 - DN50 PIPE
8 x 1"NPT NOZZLES + *NO PIPE STUB DIRECTED VERTICAL
2 x 1"NPT NOZZLES + 216*LG DN25 PIPE STUBS DIRECTED 45° DOWN
* NOTE:
FINAL LENGTHS OF DN25 EXTENSION STUBS TO BE DETIRMINED ON INSTALLATION TO ACHIEVE EFFECTIVE NOZZLE SPRAY COVERAGE AND MANUFACTURER'S MIN / MAX CLEARANCE.

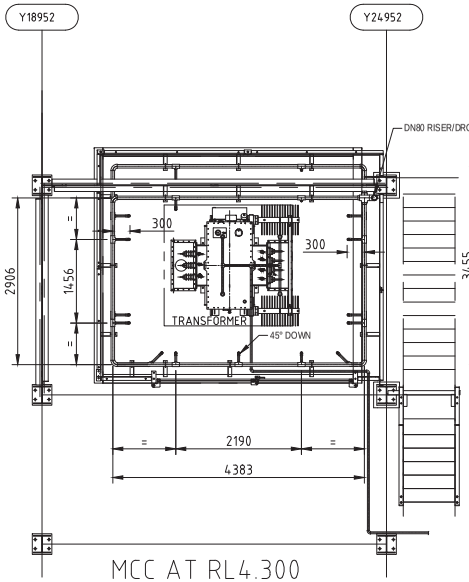

MCC AT RL4.300

SHOWING MID DISTRIBUTION RING:
2906 x 4383 - DN50 PIPE
4 x 1"NPT NOZZLES + 216*LG DN25 PIPE STUBS DIRECTED HORIZONTAL
4 x 1"NPT NOZZLES + 216*LG DN25 PIPE STUBS DIRECTED 45° DOWN
1 x 1"NPT NOZZLE + *NO PIPE STUB DIRECTED 45° DOWN
* NOTE:
FINAL LENGTHS OF DN25 EXTENSION STUBS TO BE DETIRMINED ON INSTALLATION TO ACHIEVE EFFECTIVE NOZZLE SPRAY COVERAGE AND MANUFACTURER'S MIN / MAX CLEARANCE.

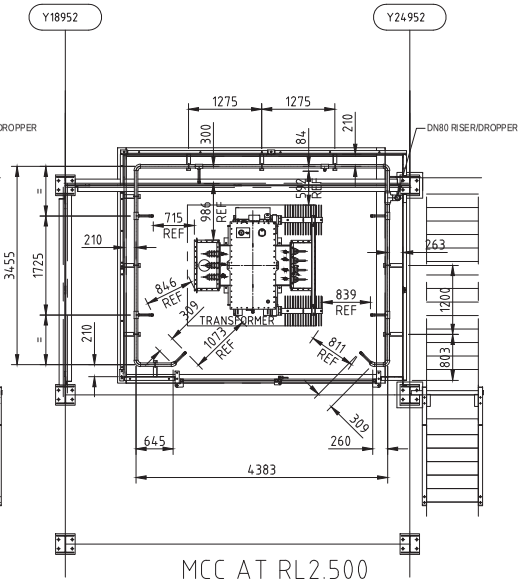

MCC AT RL2.500

SHOWING LOWER NOZZLE LOOP:
3445 x 4383 - DN50 PIPE
5 x 1"NPT NOZZLES + 216*LG DN25 PIPE STUBS DIRECTED HORIZONTAL
2 x 1"NPT NOZZLES + 241*LG DN25 PIPE STUBS DIRECTED HORIZONTAL
1 x * NO PIPE STUB DIRECTED HORIZONTAL
* NOTE:
FINAL LENGTHS OF DN25 EXTENSION STUBS TO BE DETIRMINED ON INSTALLATION TO ACHIEVE EFFECTIVE NOZZLE SPRAY COVERAGE AND MANUFACTURER'S MIN / MAX CLEARANCE.

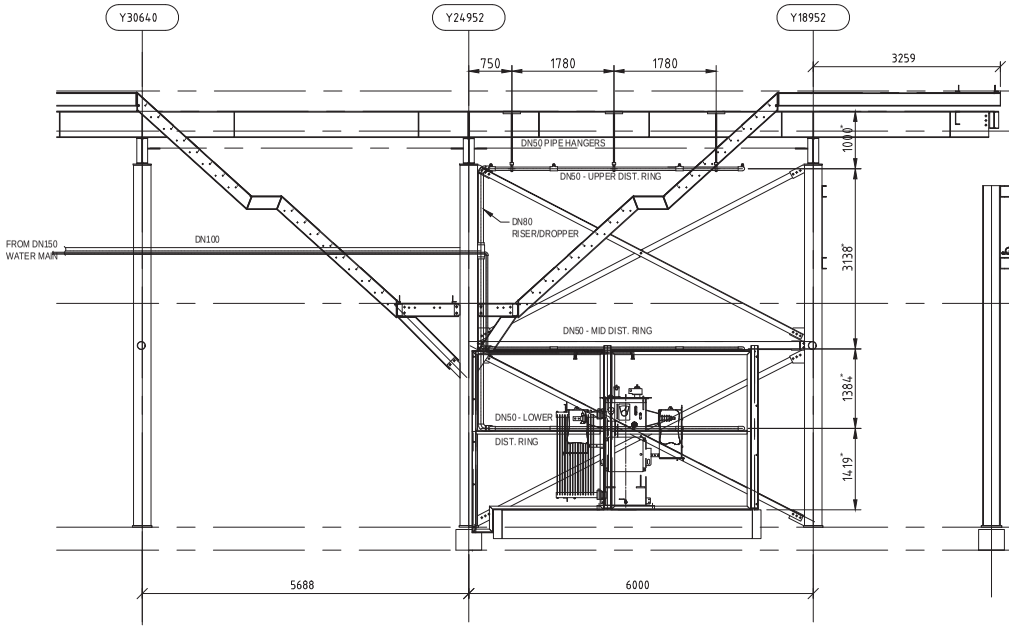

WEST ELEVATION AT X-675 TO X-1700

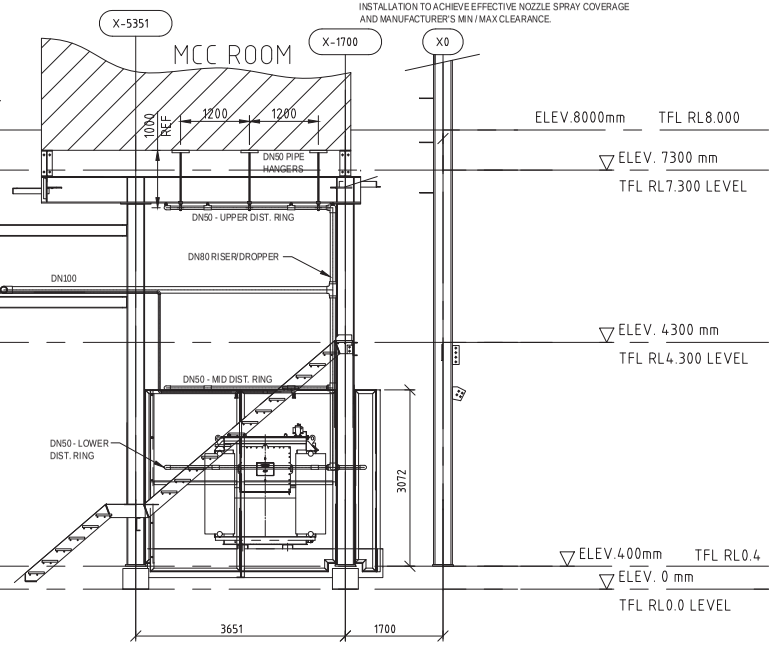

NORTH ELEVATION ON GRID Y24952

SITE INSTALLATION NOTE:
DIMENSIONS DENOTED WITH * ARE INDICATIVE ONLY AND MAY BE 'SITE' ADJUSTED TO SUIT ON INSTALLATION.

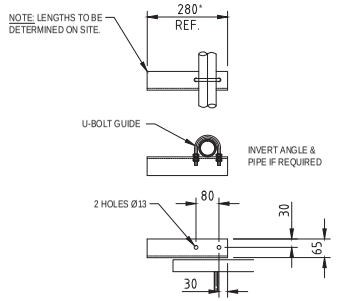

PIPE SUPPORT BRACKET

TYPICAL DETAIL
USED WHERE STRUCTURE IS AVAILABLE TO SIDE OF PIPE.
SCALE 1:10

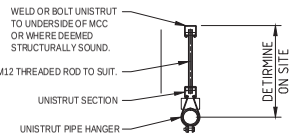

PIPE HANGER

TYPICAL DETAIL
USED WHERE NO STRUCTURE IS AVAILABLE TO SIDE OF PIPE.
SCALE 1:10